The Cardinal series sliding door enclosures are stocked in the following configurations.

Nearly any custom configuration is possible. Please inquire.

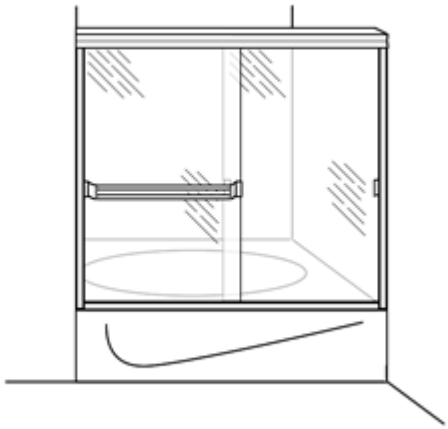

TE - Tub Enclosure

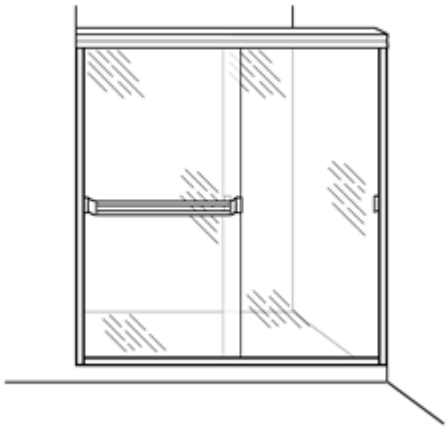

SE - Shower Enclosure

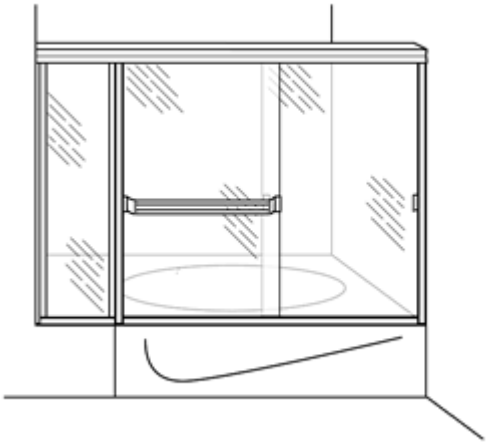

TEI - Tub Enclosure with Inline Panel

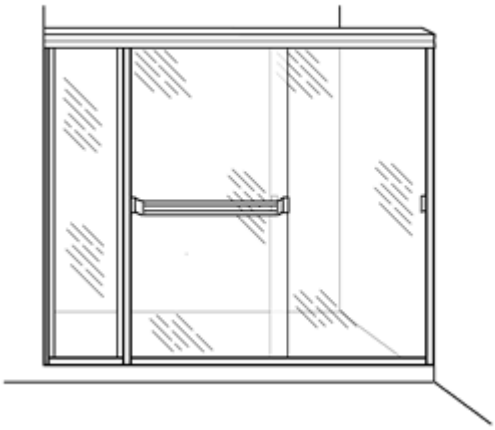

SEI - Shower Enclosure with Inline Panel

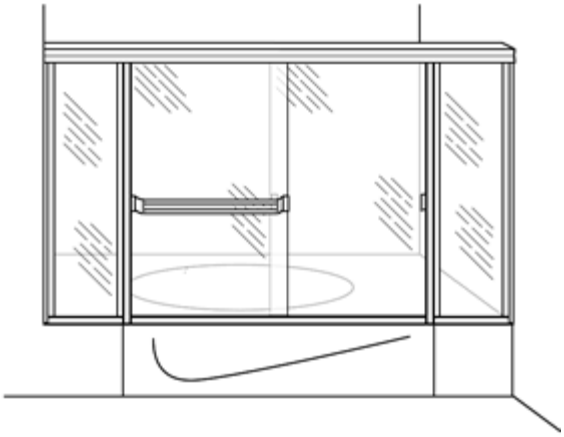

TE2 - Tub Enclosure with Two Inline Panels

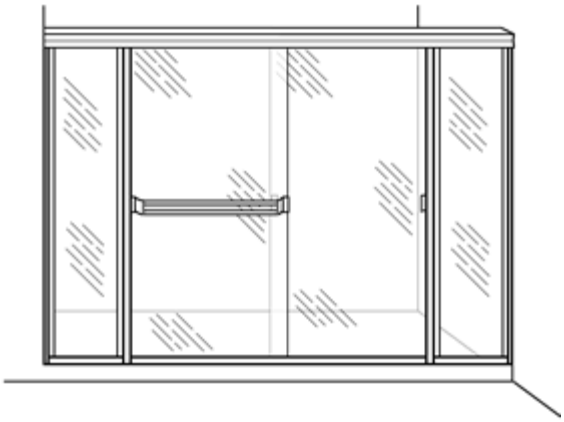

SE2 - Shower Enclosure with Two Inline Panels

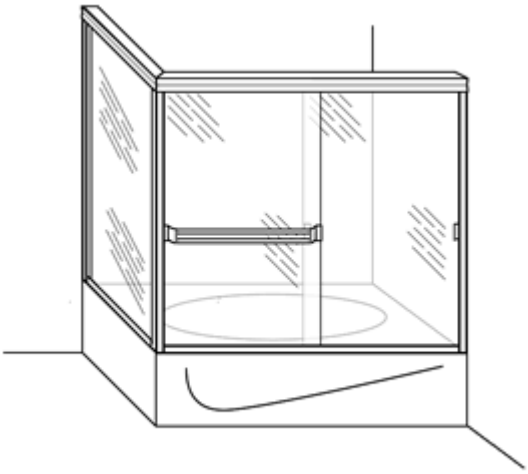

TE3 - Tub Enclosure with Return Panel

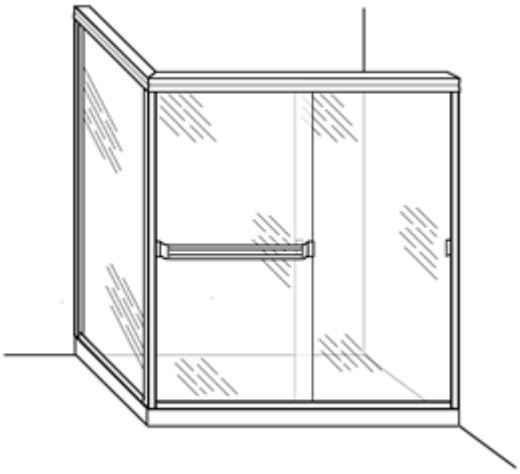

SE3 - Shower Enclosure with Return Panel

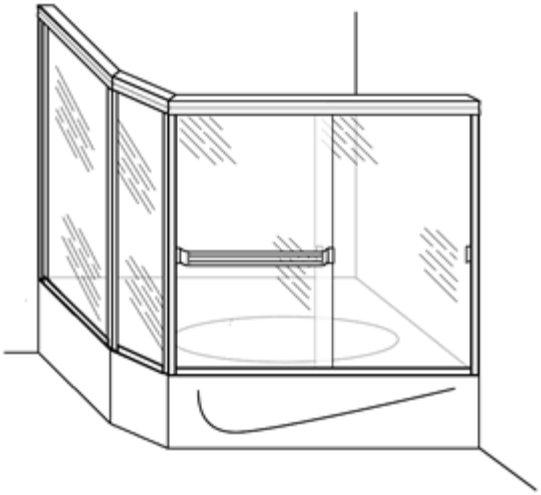

TE4 - Tub Enclosure with Angled and Return Panel

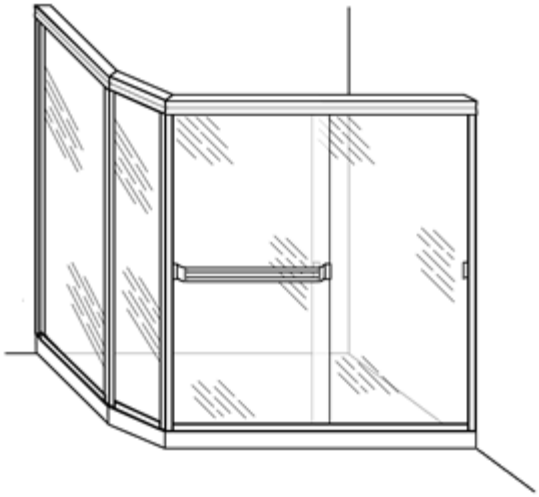

SE4 - Shower Enclosure with Angled and Return Panel